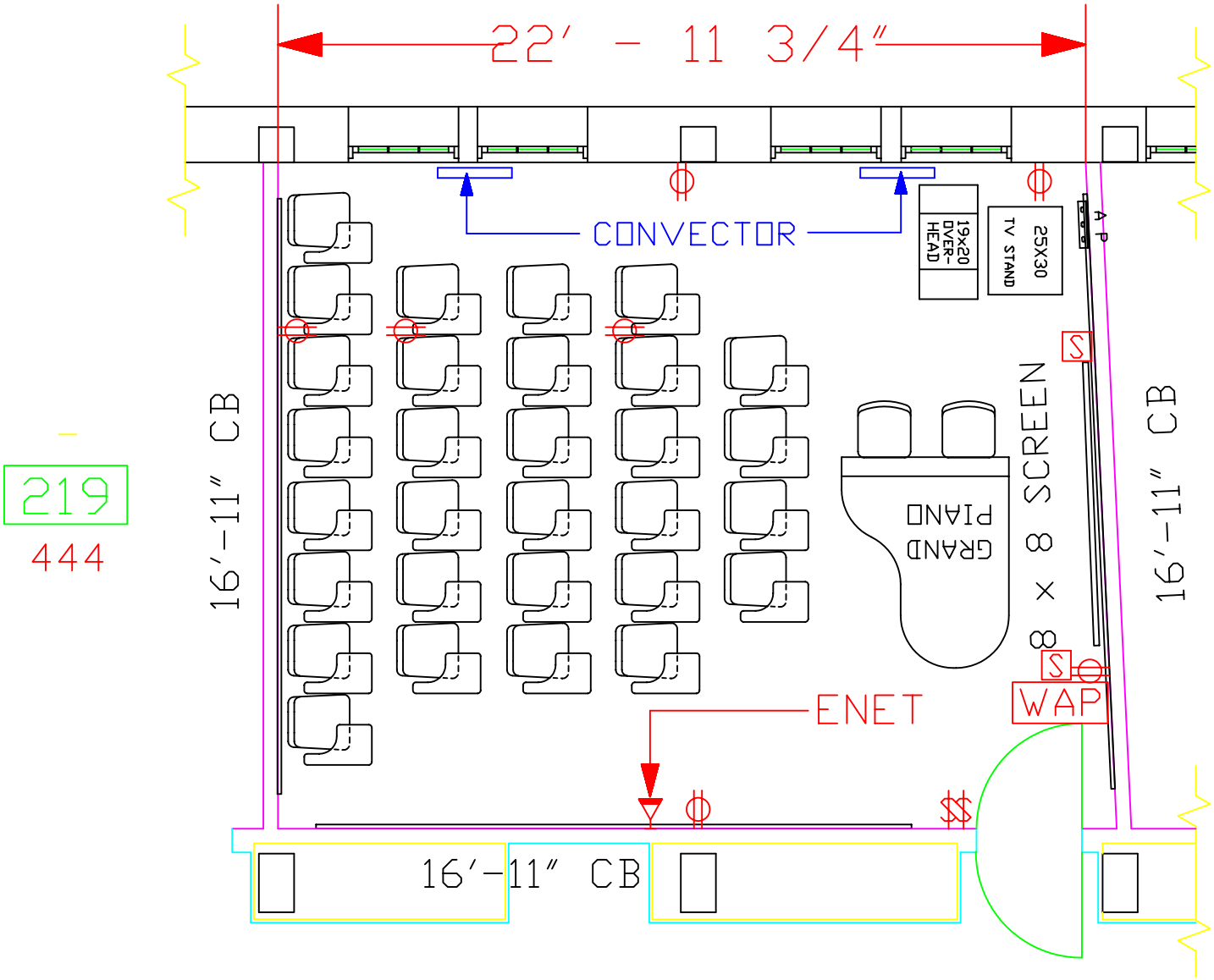
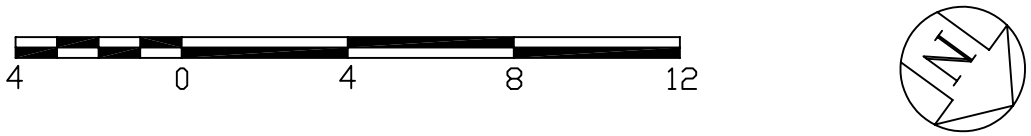
SECOND FLOOR PLAN